DIMENSIONS

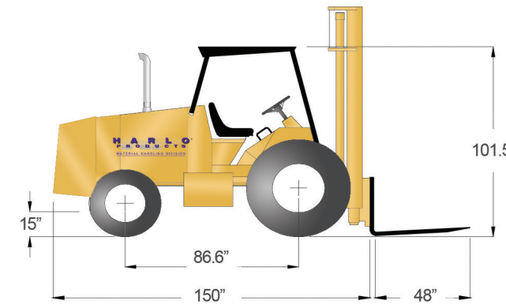

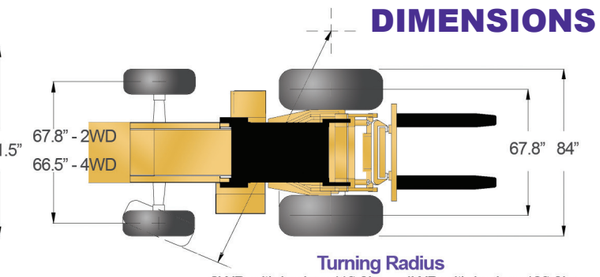

Turning Radius

2WD with brakes 11ft 9in
2WD without brakes 13 ft
4WD with brakes 10ft 9in
4WD without brakes 13ft 3in

MAST OPTIONS

Lift Height	Type	Available Carriage Width	Stage	Overall Lowered	Overall Extended	Capacity at 24” Load Center	2WD Weight	4WD Weight	Freelift
10’ Roller	Notch ITA *Class 3*	60” | 72” | 84”	2	100 in	164 in	6500lbs to 10’	12,594 lb	12,934 lb	None
11’ Roller	Notch ITA *Class 3*	48” I 60” I 72” I 84”	3	80 in	166 in	6500lbs to 11’	12,812 lb	13,152 lb	None
15’ Roller	Notch ITA - *Class 3* OR Swing Carriage	60” | 72” | 84”	2	125 in	212 in	6500lbs to 15’	13,254 lb	13,687 lb	None
20’ Freelift	Notch ITA *Class 3*	60” | 72” | 84”	3	117 in	277 in	6500lbs to 12’ 4500lbs to 15’ 2500lbs to 20’	13,972 lb	14,359 lb	80’
22’ Roller	Notch ITA or Swing Carriage	60” | 72” | 84”	3	125 in	300 in	6500lbs to 12’ 4500lbs to 15’ 2500lbs to 22’	13,874 lb	14,261 lb	None
28’ Roller	Notch ITA *Class 3*	60”	3	146 in	372 in	6500lbs to 12’ 4500lbs to 15’ 2500lbs to 22’ 1000lbs to 28’	14,173 lb	14,457 lb	None

HP6500

PRODUCTIVITY.

HARLO’s mid-sized forklift, the HP6500, is the most versatile, offering **six mast height options** and **23 different mast configurations**. The HP6500 is adaptable and can be built to meet a variety of industry specific needs; including the 28’ mast assembly preferred in masonry. Its best in class lift capacity paired with HARLO’s reputation for long-term dependability, makes the HP6500 the go to rough terrain forklift for many rental yards and is HARLO’s bestselling forklift model.

www.HARLO.com

(800) 391- 4151